ST-5000FW
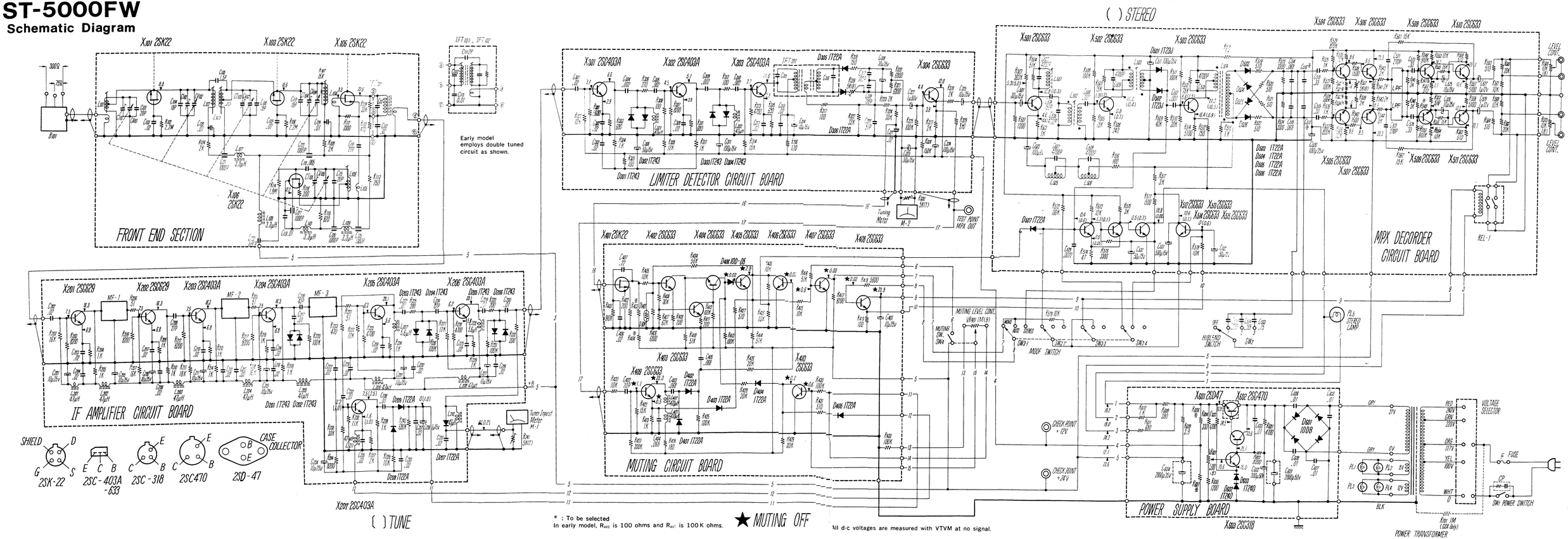
Schematic Diagram